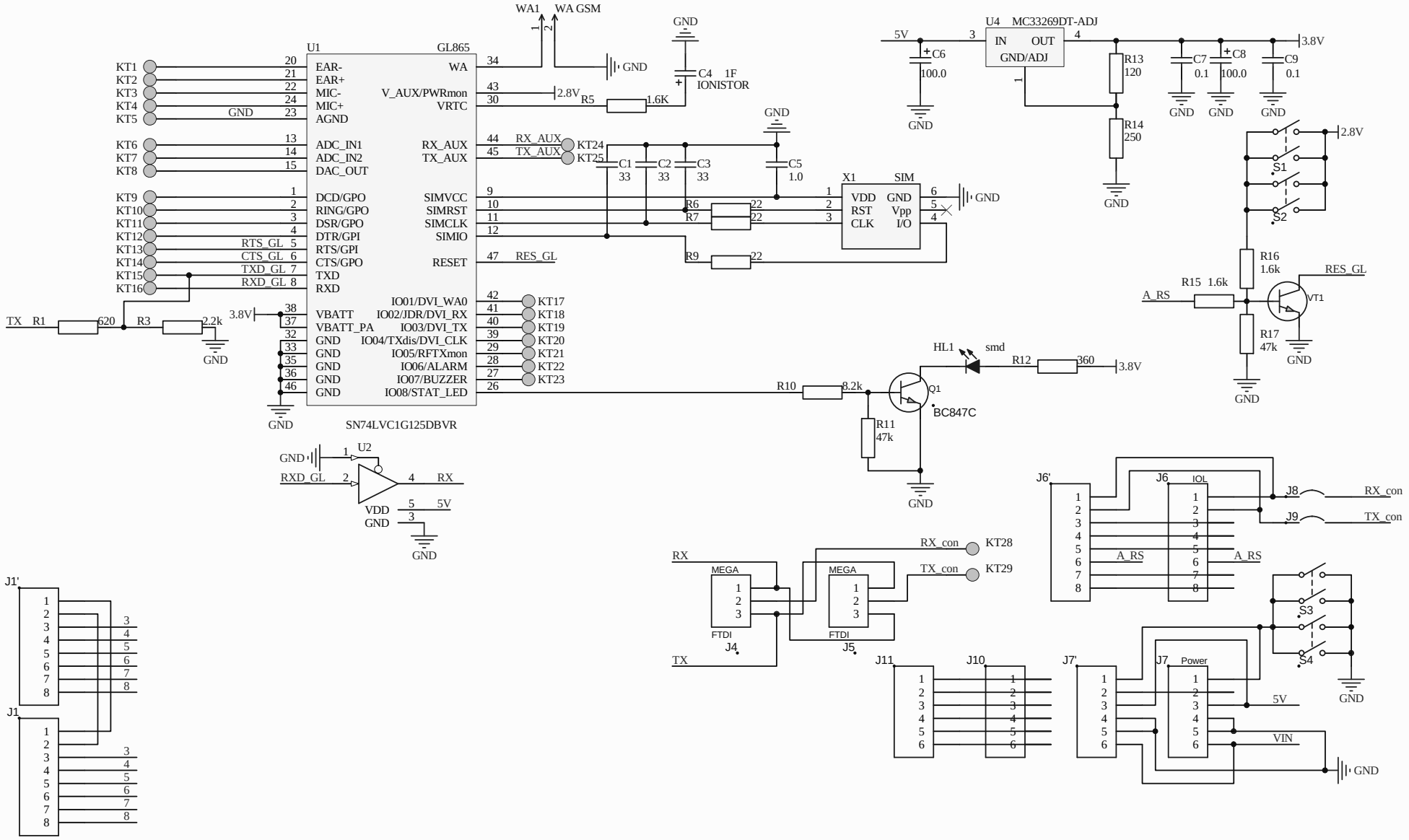
U1
GL865
EAR-
EAR+
MIC-
MIC+
AGND
ADC_IN1
ADC_IN2
DAC_OUT
DCD/GPO
RING/GPO
DSR/GPO
DTR/GPI
RTS/GPI
CTS/GPO
TXD
RXD
VBATT
VBATT_PA
GND
WA
V_AUX/PWRmon
VRTC
RX_AUX
TX_AUX
SIMVCC
SIMRST
SIMCLK
SIMIO
RESET
IO01/DVI_WA0
IO02/JDR/DVI_RX
IO03/DVI_TX
IO04/TXdis/DVI_CLK
IO05/RFTXmon
IO06/ALARM
IO07/BUZZER
IO08/STAT_LED
KT1
KT2
KT3
KT4
KT5
KT6
KT7
KT8
KT9
KT10
KT11
KT12
KT13
KT14
KT15
KT16
KT17
KT18
KT19
KT20
KT21
KT22
KT23
KT24
KT25
RTS_GL
CTS_GL
TXD_GL
RXD_GL
RES_GL
WA1
WA GSM
2.8V
R5
1.6K
C4
1F
IONISTOR
C1
33
C2
33
C3
33
C5
1.0
R6
R7
R9
22
X1
SIM
VDD
RST
CLK
GND
Vpp
I/O
TX
R1
620
R3
2.2k
3.8V
SN74LVC1G125DBVR
U2
RXD_GL
RX
VDD
5V
U4
MC33269DT-ADJ
IN
OUT
GND/ADJ
C6
100.0
R13
120
R14
250
C7
0.1
C8
100.0
C9
0.1
S1
S2
R16
1.6k
R15
1.6k
A_RS
VT1
R17
47k
HL1
smd
R12
360
R10
8.2k
R11
47k
Q1
BC847C
J6'
J6
IOL
J8
J9
RX_con
TX_con
MEGA
FTDI
J4
J5
KT28
KT29
J1'
J1
J11
J10
J7'
J7
Power
S3
S4
VIN