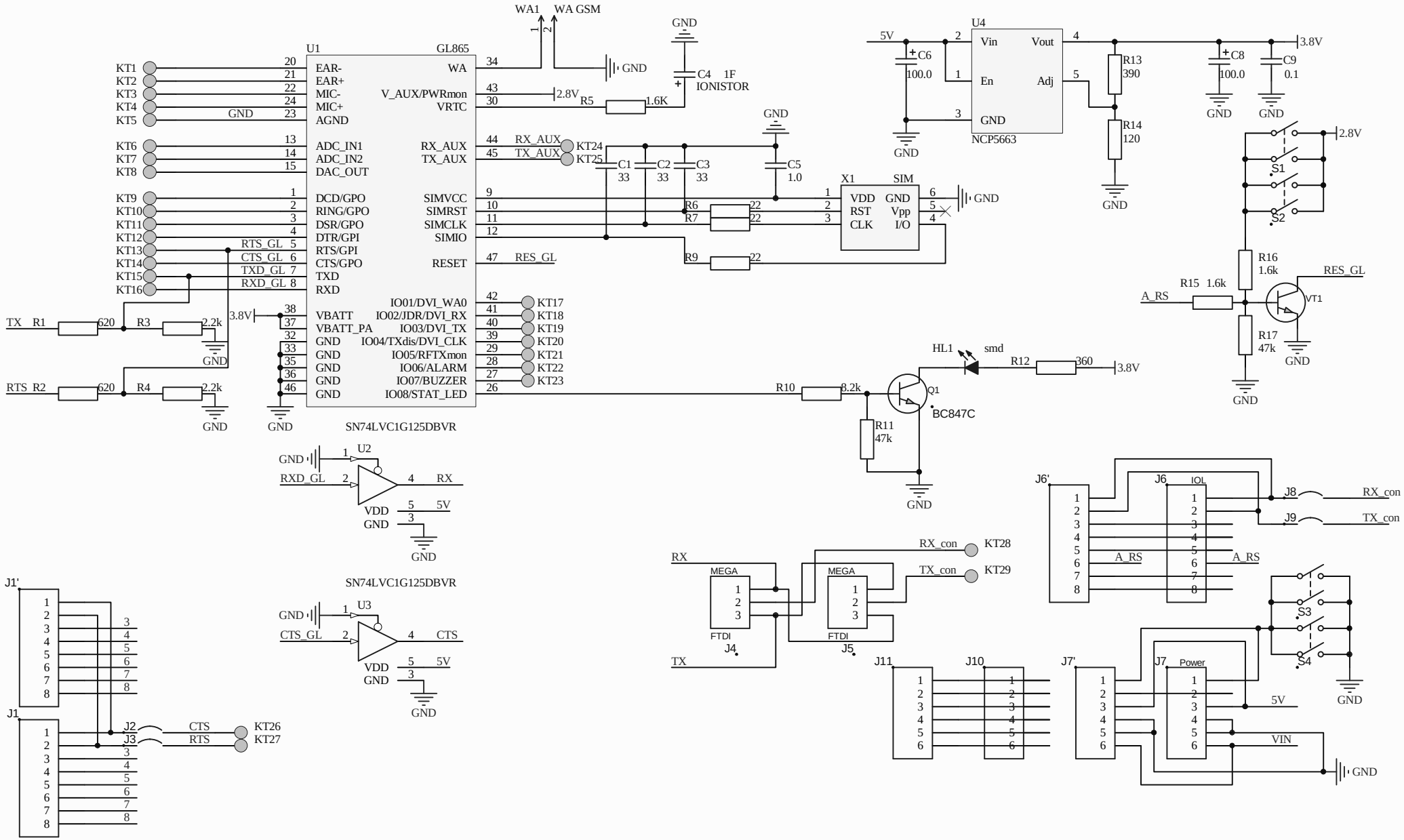
U1
GL865
EAR-
EAR+
MIC-
MIC+
AGND
ADC_IN1
ADC_IN2
DAC_OUT
DCD/GPO
RING/GPO
DSR/GPO
DTR/GPI
RTS/GPI
CTS/GPO
TXD
RXD
VBATT
VBATT_PA
GND
WA
V_AUX/PWRmon
VRTC
RX_AUX
TX_AUX
SIMVCC
SIMRST
SIMCLK
SIMIO
RESET
IO01/DVI_WA0
IO02/JDR/DVI_RX
IO03/DVI_TX
IO04/TXdis/DVI_CLK
IO05/RFTXmon
IO06/ALARM
IO07/BUZZER
IO08/STAT_LED
WA1
WA GSM
C4 1F
IONISTOR
R5 1.6K
2.8V
C1 33
C2 33
C3 33
C5 1.0
R6 22
R7 22
R9 22
X1 SIM
VDD
RST
CLK
GND
Vpp
I/O
U4
Vin
Vout
En
Adj
NCP5663
5V
C6 100.0
R13 390
R14 120
C8 100.0
C9 0.1
3.8V
S1
S2
R16 1.6k
R15 1.6k
R17 47k
A_RS
RES_GL
VT1
HL1 smd
R12 360
R10 8.2k
R11 47k
Q1
BC847C
TX R1 620 R3 2.2k
RTS R2 620 R4 2.2k
RTS_GL
CTS_GL
TXD_GL
RXD_GL
KT1
KT2
KT3
KT4
KT5
KT6
KT7
KT8
KT9
KT10
KT11
KT12
KT13
KT14
KT15
KT16
KT17
KT18
KT19
KT20
KT21
KT22
KT23
KT24
KT25
KT26
KT27
KT28
KT29
SN74LVC1G125DBVR
U2
RXD_GL
RX
VDD
U3
CTS_GL
CTS
J1'
J1
J2
J3
J4
J5
J6'
J6
IOL
J8
J9
RX_con
TX_con
MEGA
FTDI
RX
TX
J11
J10
J7'
J7
Power
S3
S4
VIN